100AAG20 Assembly

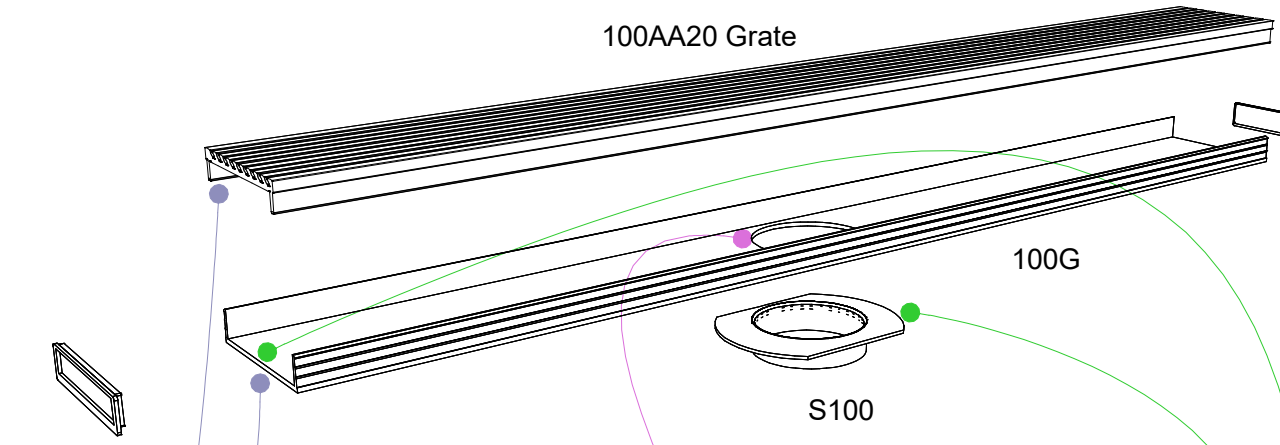

Step 2

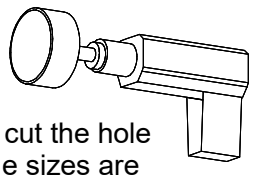

Use a holesaw to cut the hole for the spigot. Hole sizes are per below:
89mm holesaw for S100 spigot to 100mm DWV pipe
76mm holesaw for S80 spigot to 80mm DWV pipe
51mm holesaw for S50 spigot to 50mm DWV pipe
37mm holesaw for S40 spigot to 40mm DWV pipe

Step 1

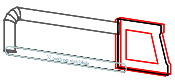

or

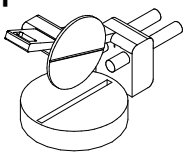

Use a hacksaw or compound saw to cut both aluminium grate and PVC channel.

NOTE,cut the GRATE AFTER the CHANNEL is ASSEMBLED to ensure the grate fits correctly.
Allow a 2-3mm gap between grate and inside of channel for easy removal.

Step 3

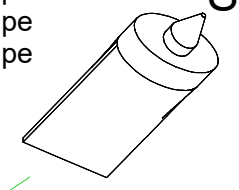

PVC solvent cement the parts together. Use type N clear with clear primer.

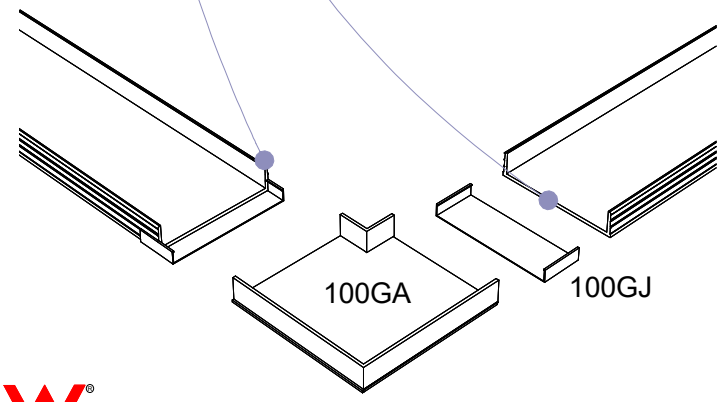

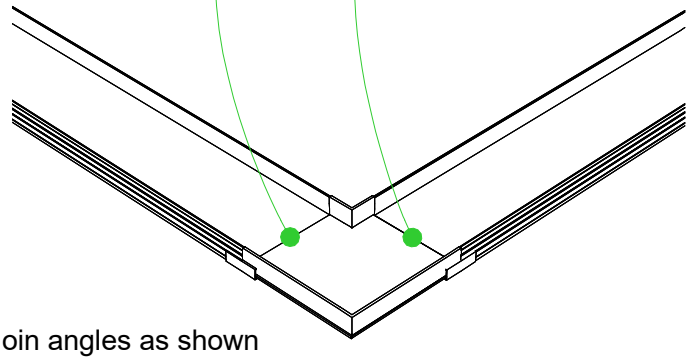

Join angles as shown if turning channel around a 90 degree corner.

WaterMark
Level 2 Licence WMKT 21249

AUSTRALIAN MADE AND OWNED

Copyright 1989-2022 Stormtech Pty Ltd

This drawing is the intellectural property of STORMTECH Pty Ltd.

Drawings are not to scale. Use dimensions shown.

Patent number: 2021904197 ®

info@stormtech.com.au, www.stormtech.com.au